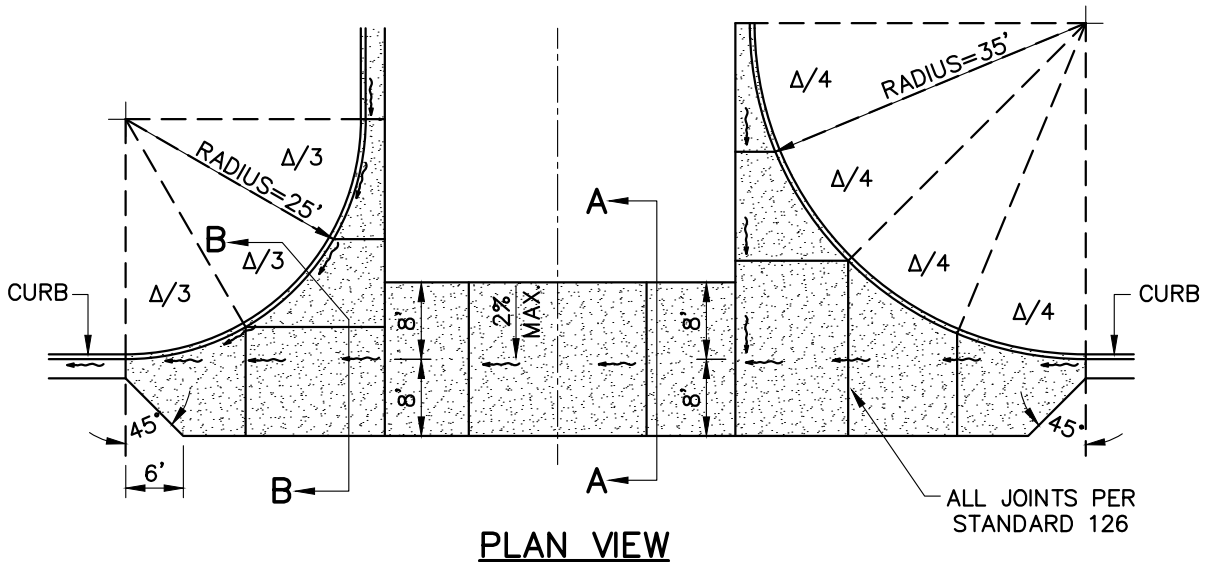

PLAN VIEW

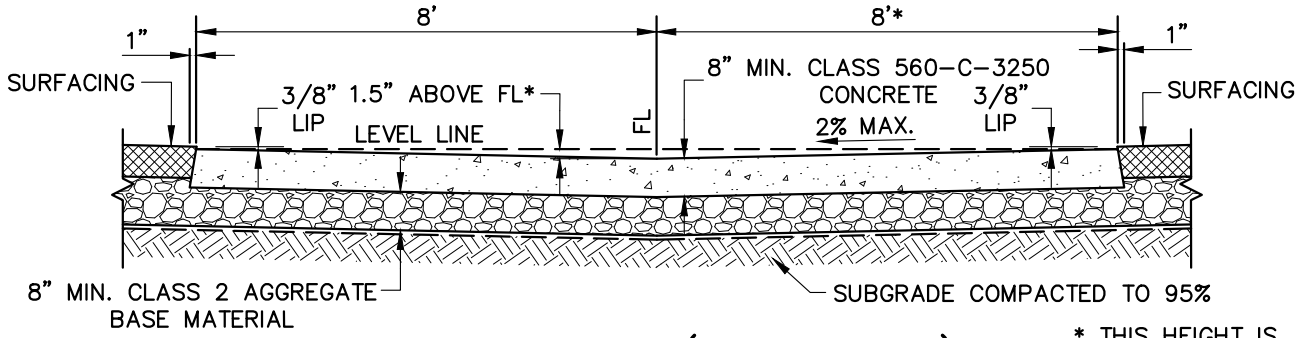

CROSS GUTTER (SECTION A–A)
NOT TO SCALE

* THIS HEIGHT IS APPROXIMATE, 2% MAX. GRADE SHALL CONTROL

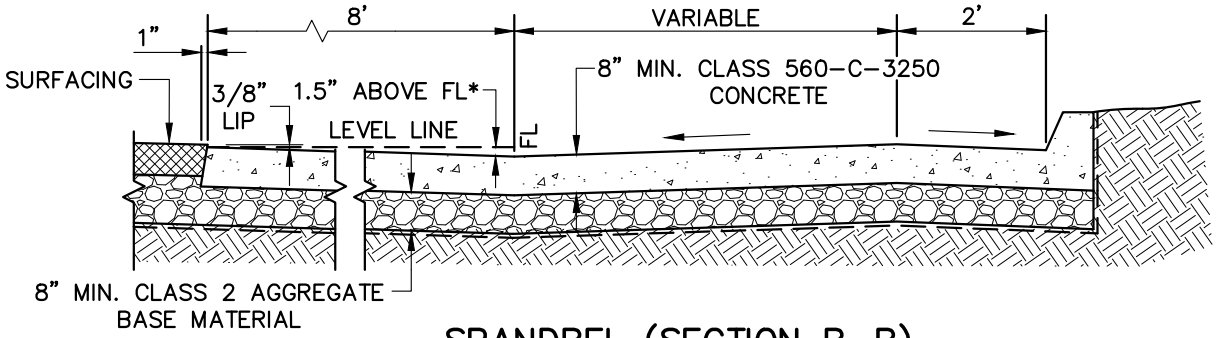

SPANDREL (SECTION B–B)
NOT TO SCALE

NOTES:

1. THIS CROSS GUTTER STANDARD TO BE CONSTRUCTED IN AREAS WHERE STREET GUTTERS WILL HAVE CONSTANT OR FREQUENT FLOWS FROM LANDSCAPED PARKWAYS AND MEDIANS, GOLF COURSES, AND AGRICULTURAL RUNOFF AND WHEN STREET GRADIENT IS LESS THAN 0.8%, HOWEVER THIS STANDARD SHALL NOT BE USED WHEN IT WILL CAUSE THROUGH TRAFFIC (PARALLEL WITH THE CROSS GUTTER FLOW LINE) TO TRAVEL OVER THE CROSS GUTTER. IN THIS SITUATION, A "STANDARD CROSS GUTTER AND SPANDREL" PER STANDARD 137 SHALL BE USED.

2. ALL NOTES FOR STANDARD 137 SHALL APPLY TO THIS STANDARD.

REGISTERED PROFESSIONAL ENGINEER JUAN RAYA C68510 CIVIL STATE OF CALIFORNIA

JUAN RAYA, P.E.
CITY ENGINEER
RCE 68510

05/18/16
DATE

REV.	DRAWN BY:	APP'D:	DATE:

MAY 2016

CITY OF INDIO

SPLASH AREA CROSS GUTTER AND SPANDREL

STANDARD PLAN No.: **138**

L:\Public Works – Engineering Standards\INDIO-138 5/19/2016 11:14 AM